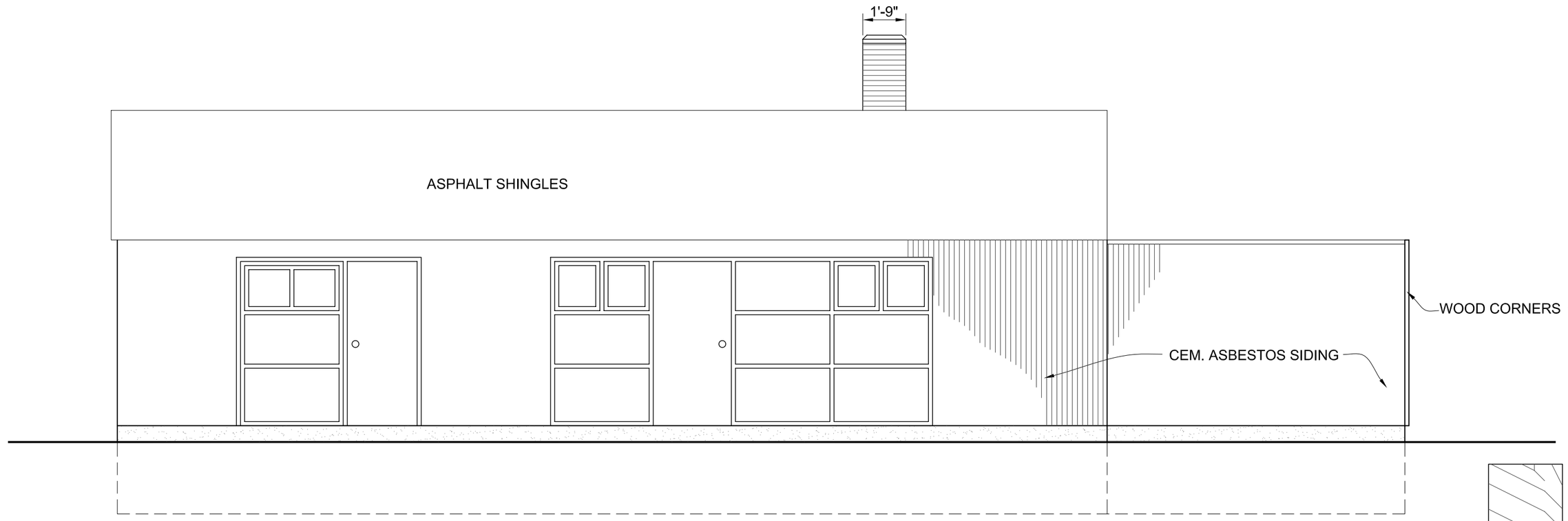

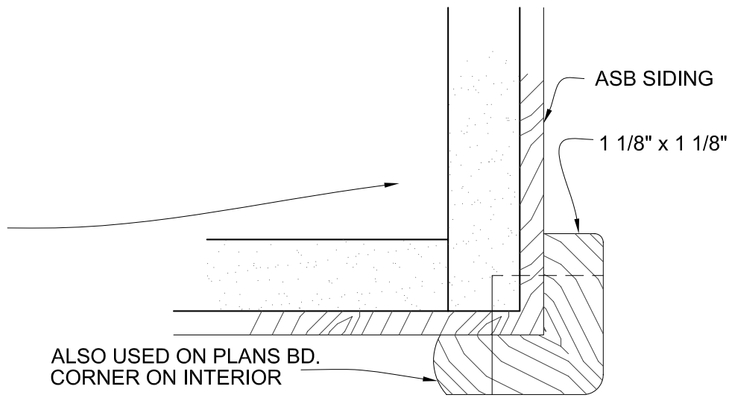

EXTERIOR W 'D. CORNER
FULL SIZE

REAR

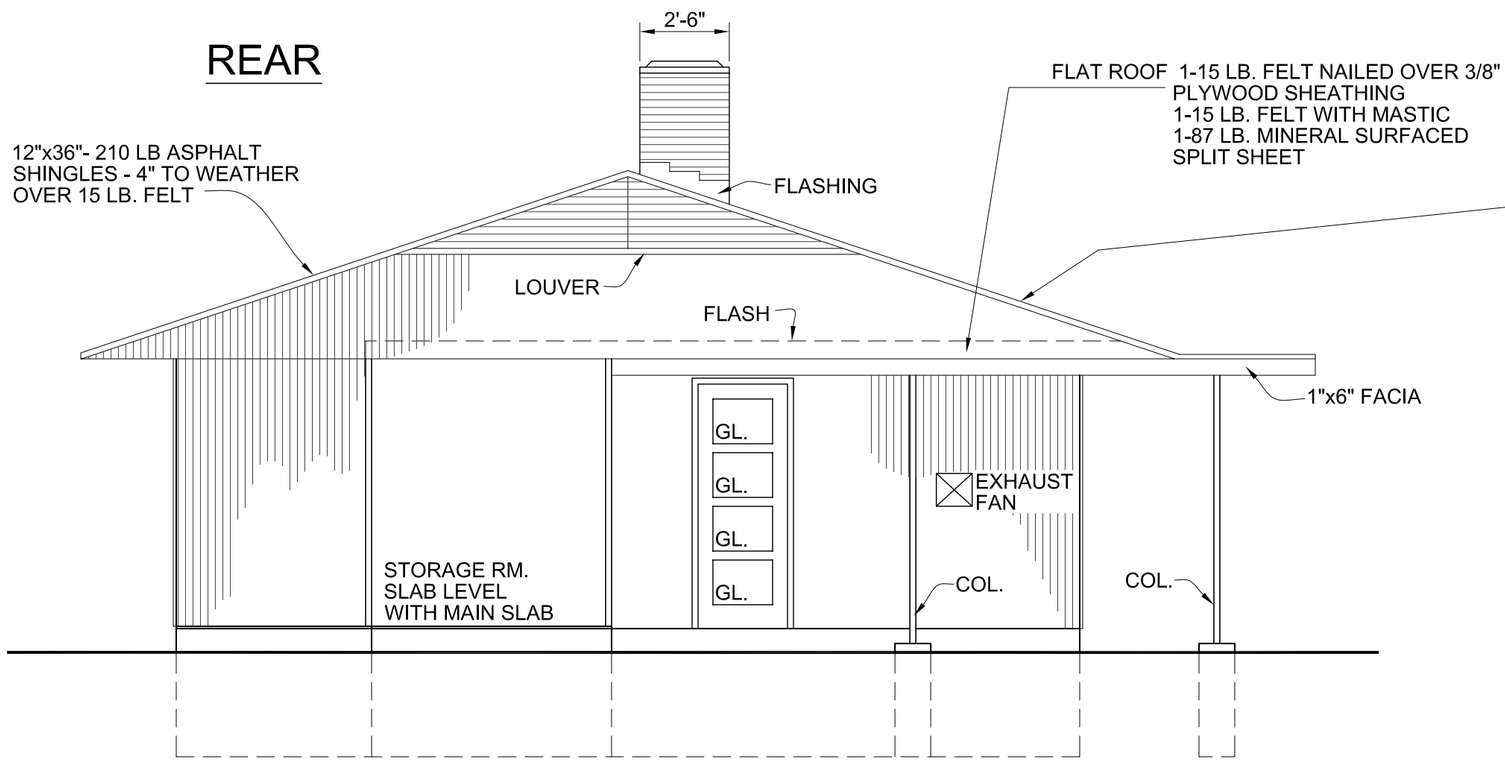

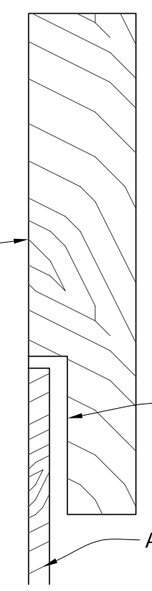

FACIA
FULL SIZE

SIDE

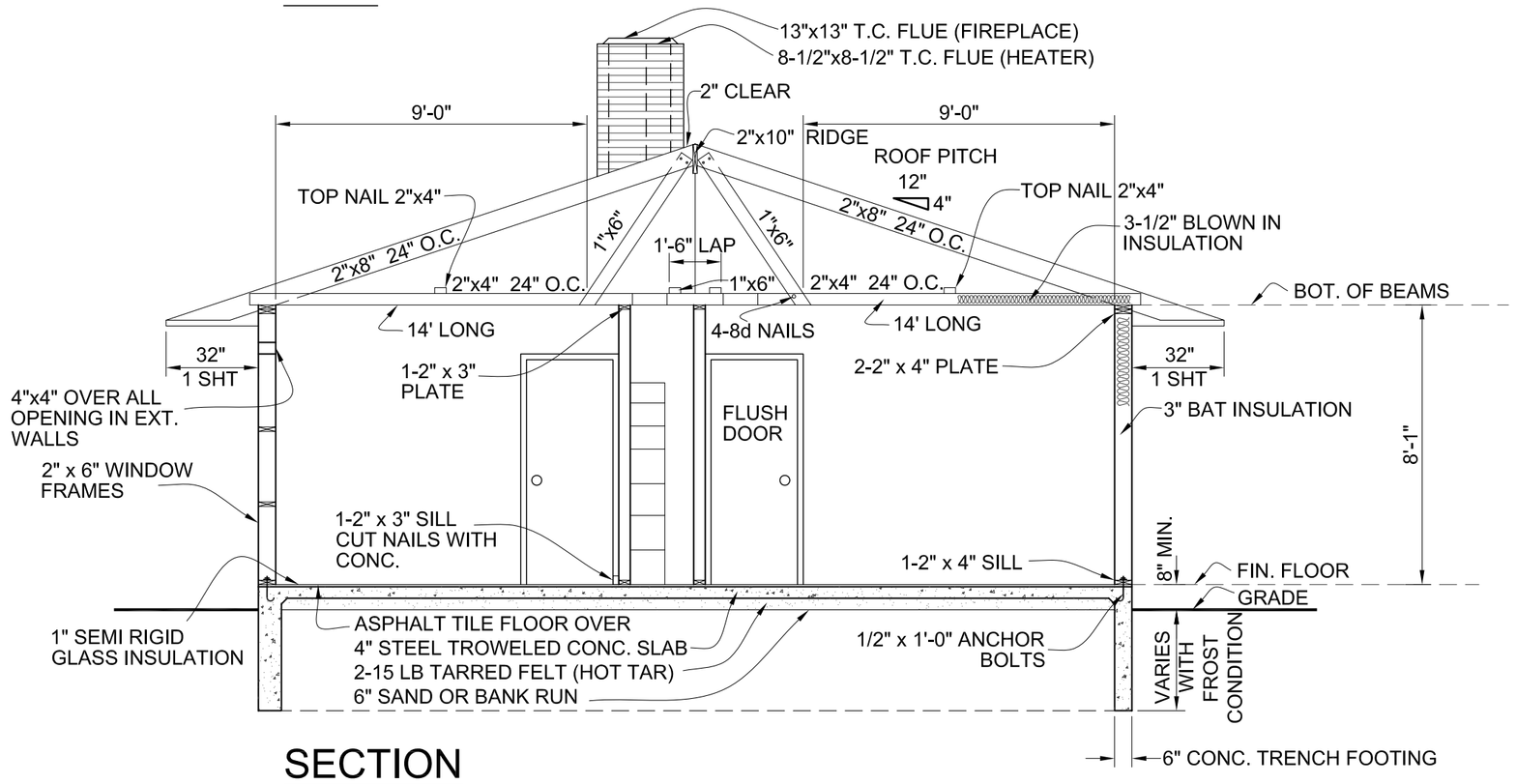

SECTION

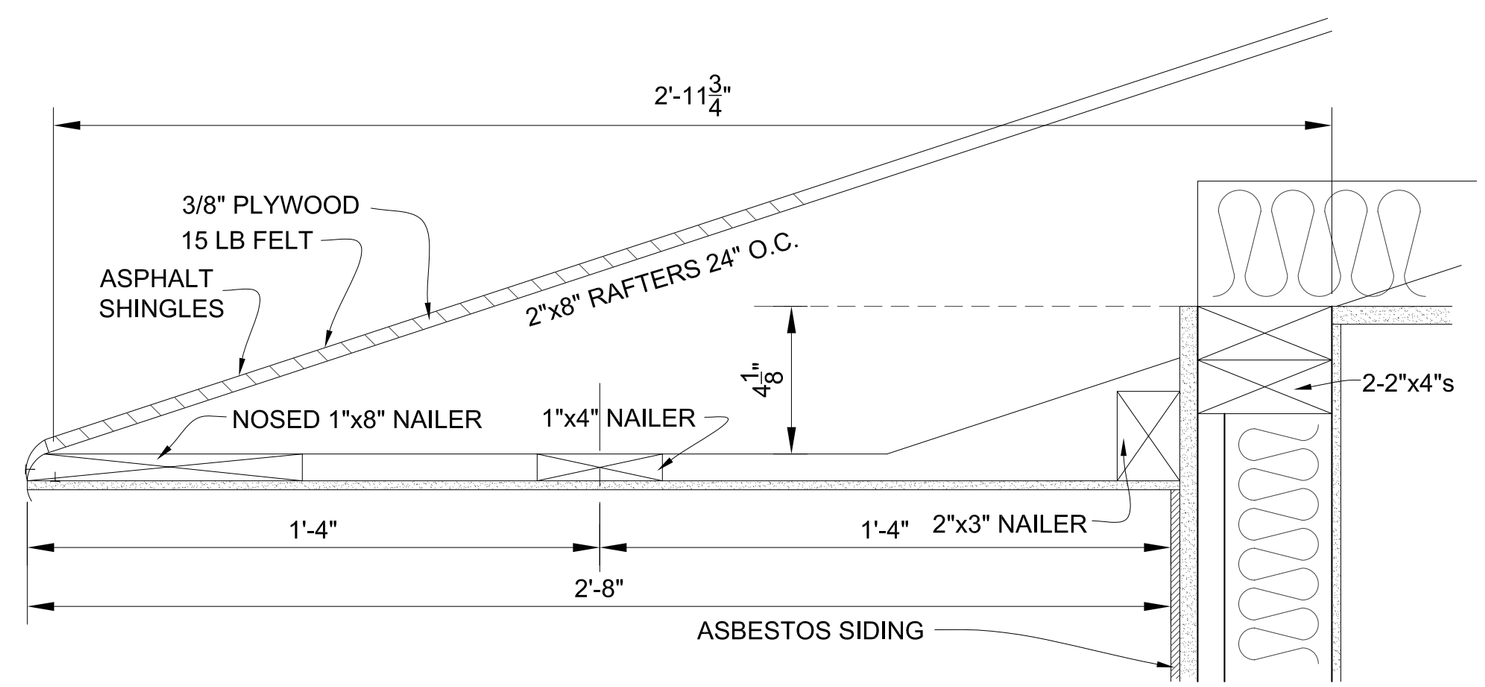

OVER HANG
SCALE: 3' = 1'-0"